WOODMASTER COMMERCIAL SERIES

Retain this manual

WOODMASTER®

Commercial Series

Ash Extraction System

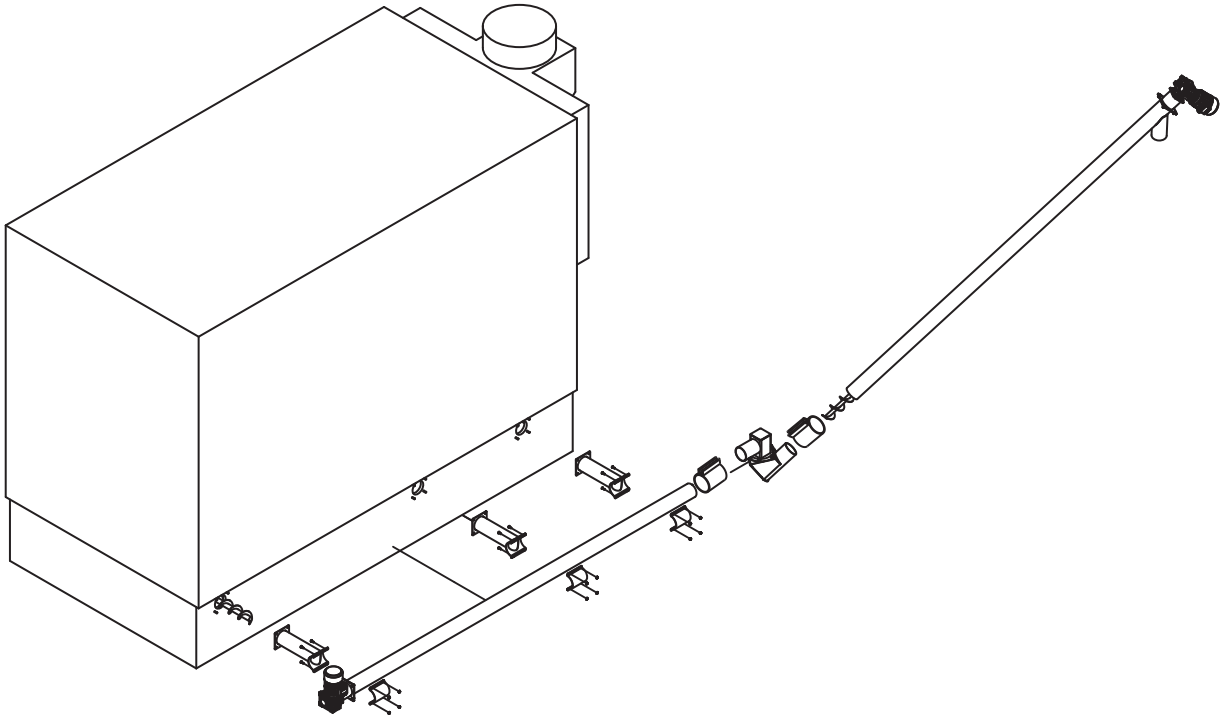

www.woodmaster.com / 800-932-3629 / Manual PN: 7994-410

Northwest Manufacturing, Inc / 600 Polk Ave SW / Red Lake Falls, MN 56750

Rev1.3

Table of Contents

General Information 3-4
Safety 5-6
Features 7-10
Transport & Installation 11-12
Operation 13
Maintenance 14
Warranty 15-18
Notes 19

IMPORTANT!
THIS MANUAL CONTAINS THE NECESSARY INFORMATION FOR THE CORRECT AND SAFE OPERATION OF THE MACHINE. IT MUST BE CAREFULLY READ BEFORE INSTALLATION, MAINTENANCE AND REPAIR OPERATIONS.

General Information

Identification of the document

This manual contains the main information for storing, moving, installing, using, monitoring, maintenance and disposal of the machine. This manual reflects the state of the machine at the time of delivery and cannot be considered inadequate because subsequently updated on the basis of new experience acquired by WoodMaster. WoodMaster reserves the right to modify the products and the manuals without updating the booklets referring to previous productions and without prior notice to the users of previously supplied machines. Prior notice regarding future updating of the manual and/or the machine's is to be considered a courtesy only. Our customer service is always available for providing information on updates of WoodMaster machines upon request.

Aim of the document

This Instruction Manual has been written to provide the user and the installer with a general knowledge of the machine and the assembly, use and maintenance instructions that are necessary for operating the machine with maximum safety for the operators. This manual is an integral part of the machine and must be kept with it until its decommissioning as a reference for all future updates.

For safe operation, all machine operators (installers, drivers, maintenance personnel, etc.) must be familiar with all the instructions contained in this manual. In particular, personnel must:

- Be familiar with and observe all instructions included in the present manual in order to operate the machine safely
- Respect the Laws relating to the prevention of accidents in the workplace

General Information

Intended use

The machine is exclusively intended for the removal of ash from the boiler.

Improper use

Use of the machine for other purposes or in different ways other than those described in this manual constitutes improper use.

WARNING
TO AVOID IRREPARABLE DAMAGE TO THE MACHINE, THE TEMPERATURE OF THE ASHES MUST NOT EXCEED 536 °F.

Liability

Guarantee of manufacturer liability cannot be called upon in case of damages to people or objects due to:

a. improper machine use;
b. use of the machine by untrained personnel;
c. serious lack of maintenance;
d. unauthorised modifications and interventions;
e. use of non-original spare parts or not compatible with that model;
f. total or partial failure to comply with the instructions;
g. extraordinary events;
h. use of the machine for purposes other than those specified;
i. use of the machine without its safety devices or with them deactivated.

Safety

- All installation and operations must follow STATE and LOCAL CODES These CODES may differ from this manual. Installation must be performed by a qualified installer.

- Anyone who is not familiar with and/or has not been trained to operate the Ash Extraction System may not operate the system. Only responsible adults should operate the machine. If the machine is not operated properly, damage could result and the warranty may be voided.

- Never allow children to play near or tamper with the machine,or any part of the system.

- Always keep the area around and in front of the system clean and free from combustible materials.

- Keep animals away from the system.

- The operation may not be continued or restarted in the event of visible damages (for example, thermal distortion, traces of smoke or fire, mechanical damages, etc.). Any damages must be repaired. In the event of any doubts, please contact your authorized WoodMaster Dealer.

- Never touch the Ash Extraction System during operation. Temperatures of the system can be very high.

- The Ash Extraction System must be operated exclusively according to the guidelines for planning, assembly, regulations, statutes and product related instructions. The manufacturer is not liable for damages and their results, if they occurred due to improper assembly, operation, application and also inadequate maintenance and cleaning.

- The Ash Extraction System is automatically controlled by the boiler controller and may turn on at any time. Always disconnect power to the machine before performing any maintenance.

- Read and follow these directions carefully. Retain this manual for as long as you own your Ash Extraction System.

Safety

Risks Connected To The Use Of The Machine

Safety of this system has been considered during the design stage, however, hazardous situations may arise if:

- The Ash Extraction System is used improperly.
- The Ash Extraction System is installed by non-qualified personnel.
- Instructions regarding safety contained in this manual are not complied with.

Residual risks

The Ash Extraction System has been designed and built to operate as safely as possible. Although every possible risk has been considered, it is possible that besides the risks deriving from improper use, the following risks may occur:

BURNING HAZARD
Risk of BURNS during operation, hot ash inside the tubes can cause dangerous temperatures.

ELECTROCUTION HAZARD
Risk of ELECTRIC SHOCK as a result of indirect contact. The machine is connected to and controlled by an electrical panel equipped with all the protection devices against overloads and short circuits. To protect against the indirect contacts, we recommend powering the panel with a line protected by differential switch that has an intervention threshold no higher than 30 mA.

NOISE HAZARD
Risk of NOISE due to rotating components.

FINGER INJURY HAZARD
During maintenance operations on auger components of the system.

SUSPENDED LOAD HAZARD
During transport and handling operations

ASPHYXIATION HAZARD
Risk of ASPHYXIA in the event of insufficient suction of fumes. We recommend conducting periodic checking of the seal gaskets of any components of the system.

PROTECTIVE GLOVES ARE MANDATORY
Protective gloves must be used during all maintenance and cleaning operations.

PROTECTIVE HELMET IS MANDATORY
During every transport or handling operation.

PROTECTIVE MASK IS MANDATORY
During maintenance and cleaning operation on the system.

EYE PROTECTION IS MANDATORY
During every operation.

Features

Sample of Basic System

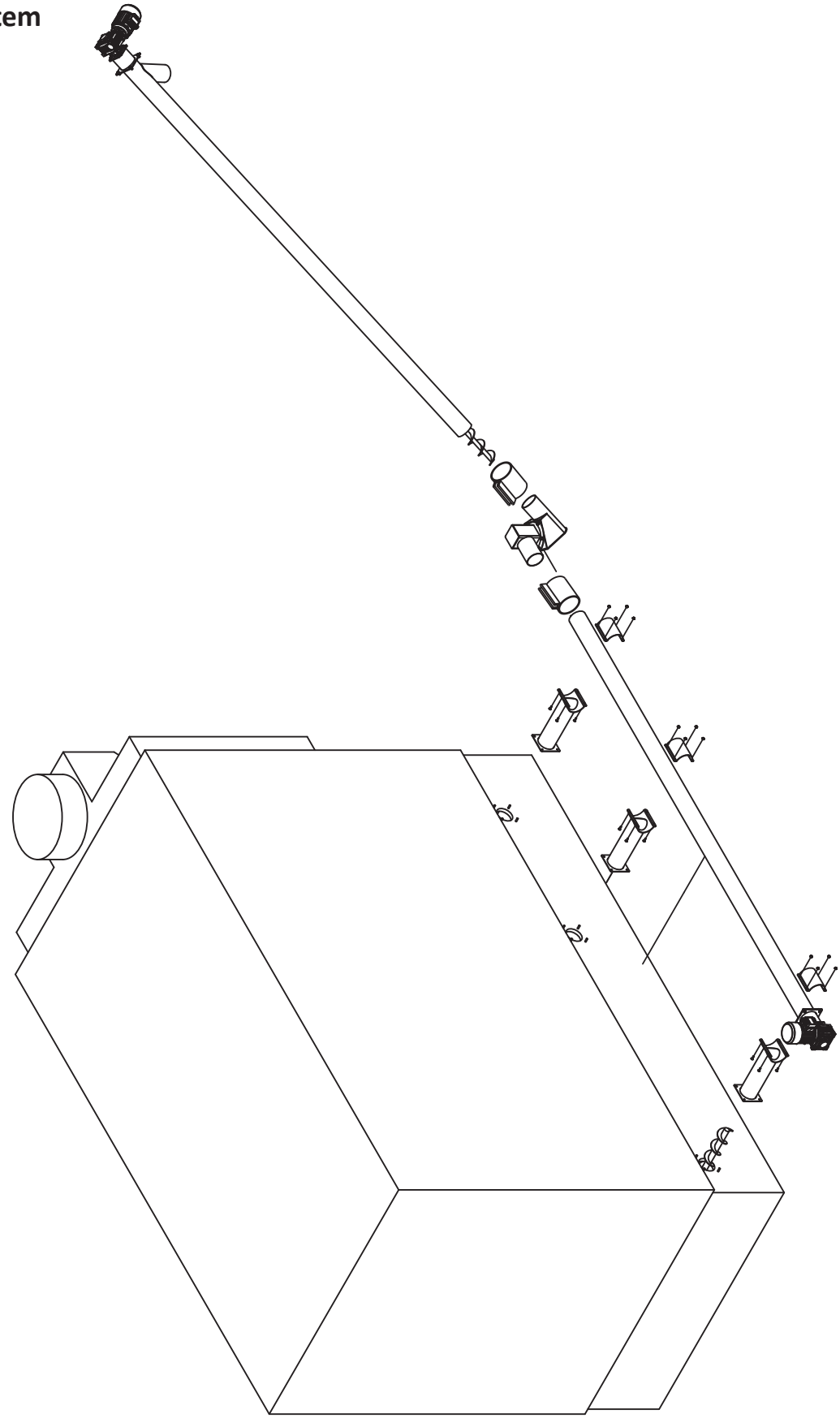

Horizontal Auger Drive Assembly

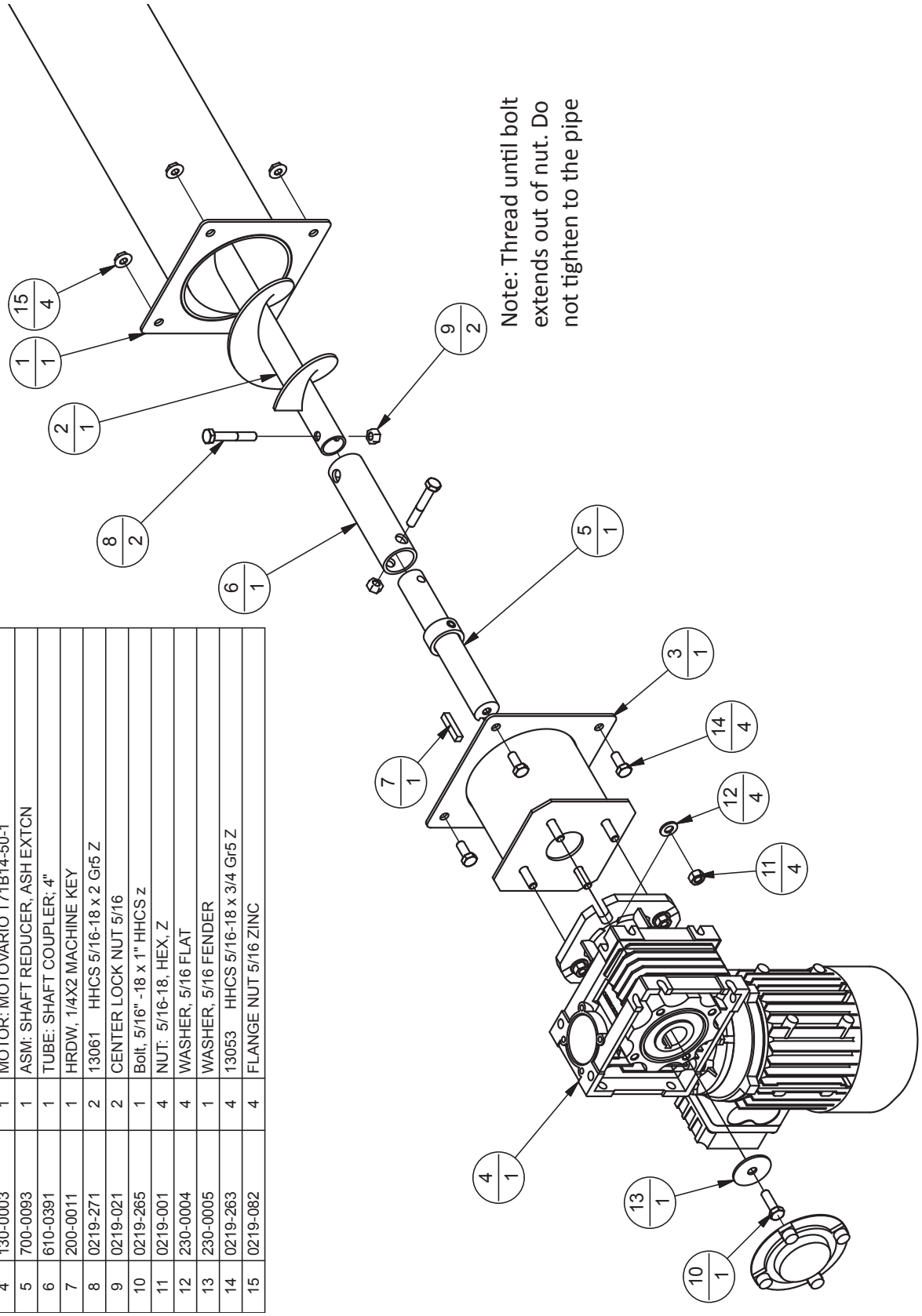

ITEM	PART NUMBER	QTY	DESCRIPTION
1	980-0145	1	PTD: ASH DELIVERY TUBE WMT, ASH EXTCN
2	800-0143	1	WMT: ANGLED ASH AUGER, ASH EXTCN
3	980-0144	1	PTD: MINI SPOOL WMT, ASH EXTCN
4	130-0003	1	MOTOR: MOTOVARIO T71B14-50-1
5	700-0093	1	ASM: SHAFT REDUCER, ASH EXTCN
6	610-0391	1	TUBE: SHAFT COUPLER; 4"
7	200-0011	1	HRDW, 1/4X2 MACHINE KEY
8	0219-271	2	13061 HHCS 5/16-18 x 2 Gr5 Z
9	0219-021	2	CENTER LOCK NUT 5/16
10	0219-265	1	Bolt, 5/16" -18 x 1" HHCS z
11	0219-001	4	NUT: 5/16-18, HEX, Z
12	230-0004	4	WASHER, 5/16 FLAT
13	230-0005	1	WASHER, 5/16 FENDER
14	0219-263	4	13053 HHCS 5/16-18 x 3/4 Gr5 Z
15	0219-082	4	FLANGE NUT 5/16 ZINC

Vertical Auger Drive Assembly

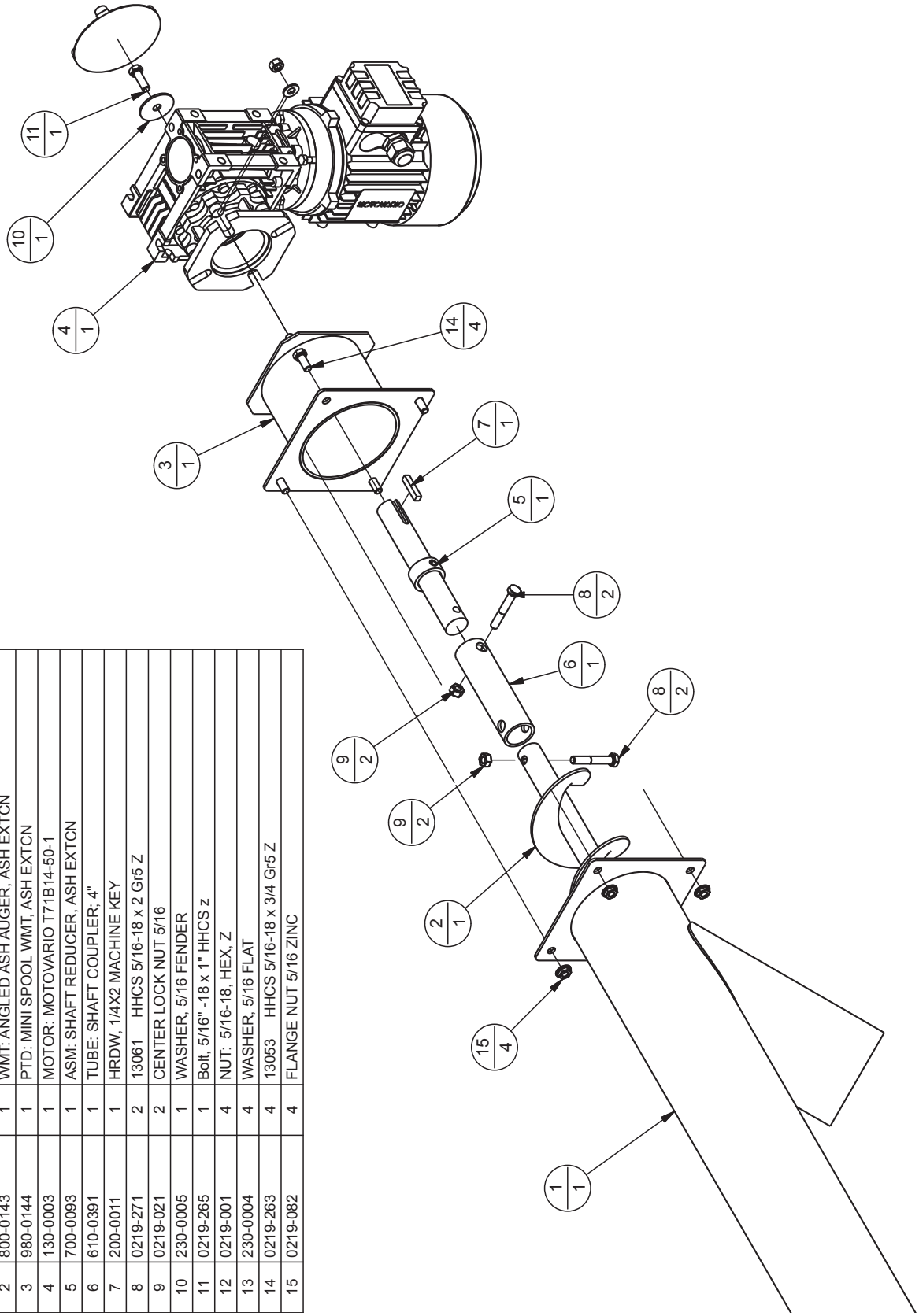

ITEM	PART NUMBER	QTY	DESCRIPTION
1	980-0142	1	PTD: ANGLED ASH AUGER PIPE WMT, ASH EXTCN
2	800-0143	1	WMT: ANGLED ASH AUGER, ASH EXTCN
3	980-0144	1	PTD: MINI SPOOL WMT, ASH EXTCN
4	130-0003	1	MOTOR: MOTOVARIO T71B14-50-1
5	700-0093	1	ASM: SHAFT REDUCER, ASH EXTCN
6	610-0391	1	TUBE: SHAFT COUPLER; 4"
7	200-0011	1	HRDW, 1/4X2 MACHINE KEY
8	0219-271	2	13061 HHCS 5/16-18 x 2 Gr5 Z
9	0219-021	2	CENTER LOCK NUT 5/16
10	230-0005	1	WASHER, 5/16 FENDER
11	0219-265	1	Bolt, 5/16" -18 x 1" HHCS z
12	0219-001	4	NUT: 5/16-18, HEX, Z
13	230-0004	4	WASHER, 5/16 FLAT
14	0219-263	4	13053 HHCS 5/16-18 x 3/4 Gr5 Z
15	0219-082	4	FLANGE NUT 5/16 ZINC

Swivel Joint Assembly

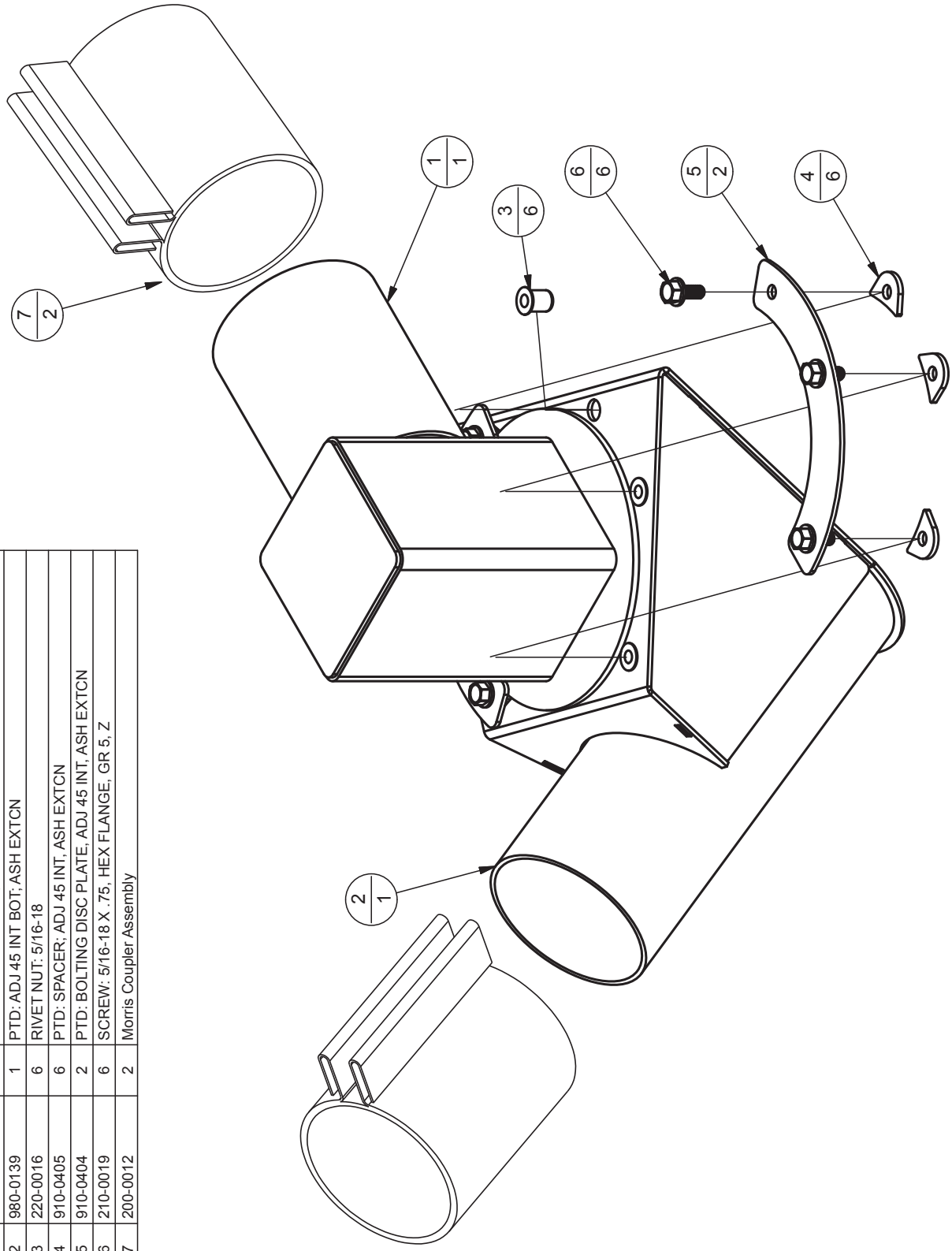

ITEM	PART NUMBER	QTY	DESCRIPTION
1	980-0140	1	PTD: ADJ 45 INT TOP; ASH EXTCN
2	980-0139	1	PTD: ADJ 45 INT BOT; ASH EXTCN
3	220-0016	6	RIVET NUT: 5/16-18
4	910-0405	6	PTD: SPACER; ADJ 45 INT, ASH EXTCN
5	910-0404	2	PTD: BOLTING DISC PLATE, ADJ 45 INT, ASH EXTCN
6	210-0019	6	SCREW: 5/16-18 X .75, HEX FLANGE, GR 5, Z
7	200-0012	2	Morris Coupler Assembly

Transport & Installation

Transport and Handling

Note: Make sure the Ash Extraction System is not damaged during transport, any damage may affect performance.

Installation

The swivel joint allows for the ash bin to be placed in multiple configurations to allow for easier installation in tight places.

The vertical auger should be secured by supports attached to the ceiling. the supports must be strong enough to support the weight of the auger as well as the ash that it will hold.

Note: There will be times during the life of the unit that the augers will need to be removed for maintenance purposes. Ensure there is enough space in the bioler room to remove the full length of the augers.

Note: Make sure the area around the Ash Extraction System is free from combustable materials.

The solid black areas represtent the possible locations of the ash bin.

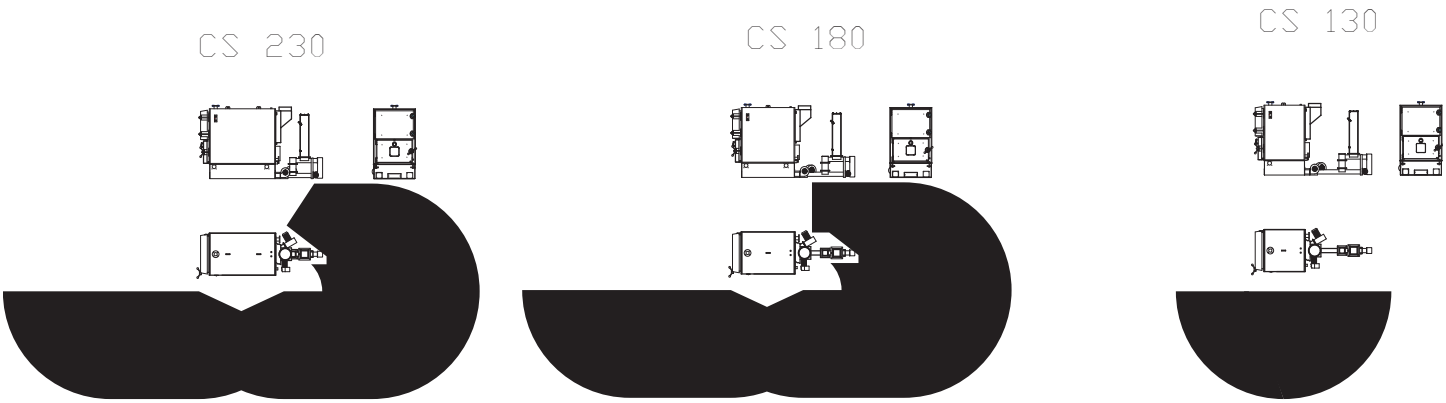

Installation must be completed by qualified persons

Transport & Installation

CS 500

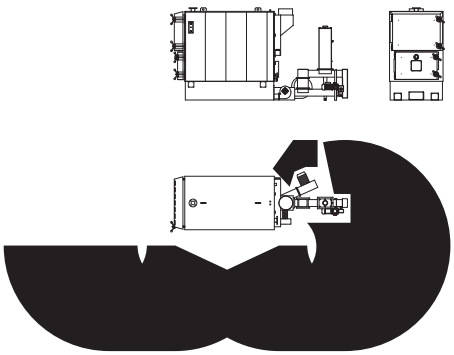

CS 400

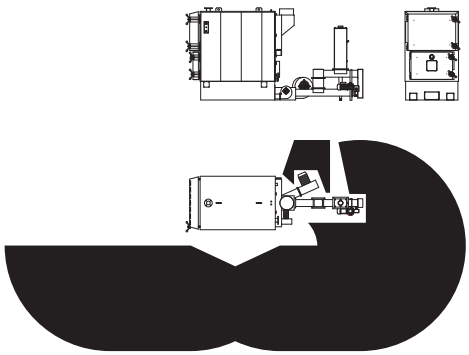

CS 300

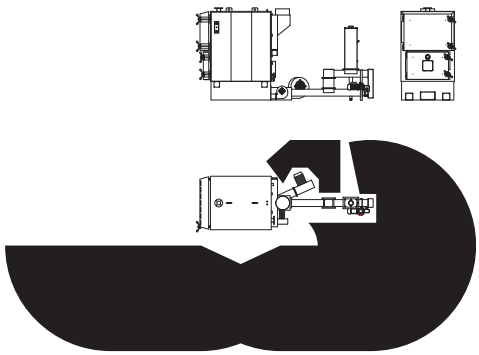

CS 950

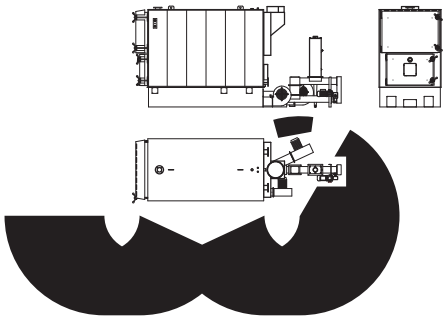

CS 800

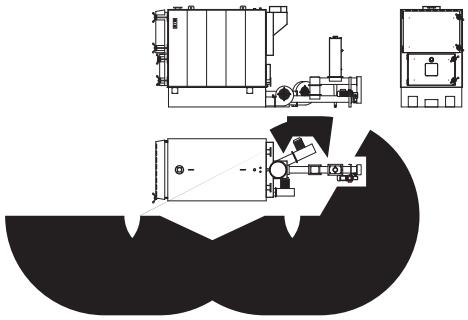

CS 650

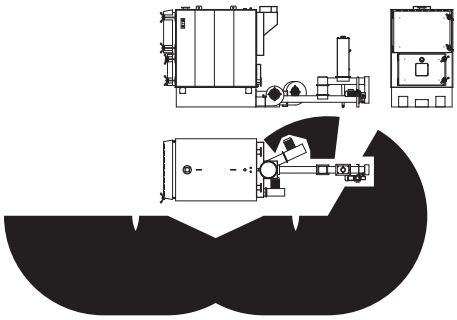

CS 2000

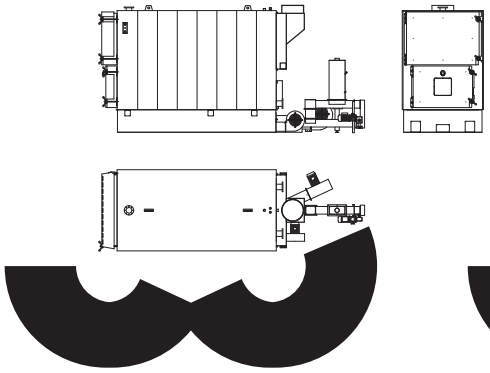

CS 1650

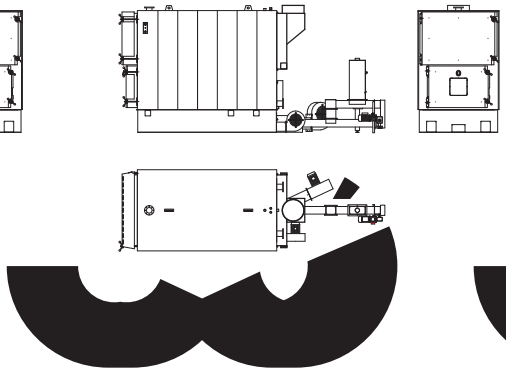

CS 1300

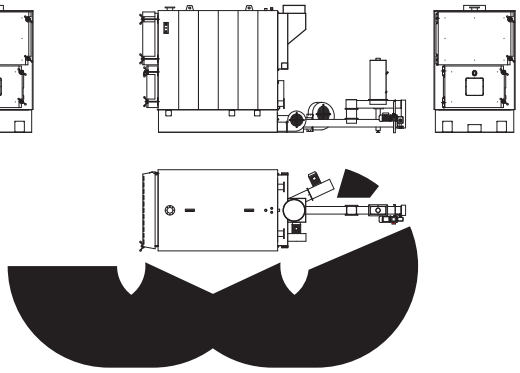

Operation

Operating the Ash Extraction System

The Ash Extraction System is automatically run by the Nova Reg controller that also runs the boiler. There is also a manual override to run the augers for cleaning purposes.

Please Refer to the owners manual that came with your Nova Reg controller.

Maintenance

Cleaning the ash bin

The ash bin should be an all metal container and should be checked frequently to prevent overflow. The ash bin should be emptied into an all metal container and allowed to cool for permanent disposal. Two ash bins should be used to prevent having to shut the system down to clean the bin. Simply switch the empty one in for the full one.

CAUTION: The ash bin may be hot.

CAUTION: The Ash Extraction System is automated an may run while you are emptying the ash bin.

Cleaning the Augers and pipes

Note: Make sure that all components of the Ash Extraction System are cool before performing any cleaning or maintenance.

The Ash Extraction System will need to be emptied and cleaned during the seasonal shut down of the WoodMaster Commercial Series boiler.

To clean the ash augers, manually run the motors that control the augers, while the boiler itself is shut down.

Once the combustion chamber is empty and ash is no longer present at the outlet of the ash auger, shut the motors down, and disconnect all power.

Next you should pull each motor and auger out of the system and clean the auger and the tube. A corrsion inhibitor should be applied to the auger and the tube to prevent excessive corrosion during the off season.

Reinstall the motors and auger.

Note: Ash should not be present in any part of the system during extended periods of down time.

If the Ash Extaction System Plugs

Note: Make sure that all components of the Ash Extraction System are cool before performing any cleaning or maintenance.

In the event that the Ash Extraction System becomes completely plugged, the augers will need to be manually removed.

Note: Disconnect all power before attempting to clean the augers.

To remove the augers unbolt each motor and and pull the auger out of the system and clean the auger and the tube.

Once you have verified that all auger tubes have been cleaned of ash, reinstall the motors and augers.

Test the augers by manually running them to ensure proper operation.

Warranty

TWO YEAR LIMITED WARRANTY

This Warranty is provided by Northwest Manufacturing, Inc. only for the benefit of the, initial purchaser (Original Owner) of the Northwest Manufacturing, Inc. Ash Extraction System (”System”) on the original site of installation (the “Site of Original Installation”).

This Warranty provides specific legal rights. You may have other rights depending on where you live.

The rights in this warranty depend on the proper assembly, installation and commissioning of the System by a contractor or installer who is certified by Northwest Manufacturing, Inc. (the “Certified Contractor”); and proper operation and maintenance by a Certified Boiler Operator that is also certified by Northwest Manufacturing Inc. to operate the system. Proper maintenance must be preformed. Installation by an uncertified or unqualified contractor or installer and/or improper maintenance, operation, misuse or abuse of the system shall void this Warranty in whole or in part.

LIMITED TWO (2) YEAR WARRANTY

Northwest Manufacturing, Inc. warrants that the components of the Ash Extraction System shall be free of defects in material and workmanship for TWO (2) YEARS from the Date of Original Installation. Once a defect is determined, repair or replacement of the defective parts, will be at the sole discretion of Northwest Manufacturing, Inc..

LIMITED ONE (1) YEAR WARRANTY ON ELECTRICAL COMPONENTS

Northwest Manufacturing, Inc. warrants to the Original Owner, any electrical components in the Ash Extraction System is free from defects for the period of one (1) year from the date of installation. Northwest Manufacturing, Inc. will determine weather to repair or replace the defective parts.

START OF WARRANTY PERIODS

The Warranty Period shall begin on the date the System installation has been completed (the “Original Date of Installation”). In the event of dispute as to the Date of Original Installation, the shipping date of your System, as recorded by Northwest Manufacturing, Inc., shall be deemed to be the Date of Original Installation.

WARRANTY LIMITATIONS

I. Damages for unsatisfactory performance caused by improper installation or any damages caused by or as a result of improper use of the System, incorrect start-up, incorrect or careless handling, improper control adjustment, disregard of the operating instructions and proper maintenance or disregard of any other instructions. Improper alteration and repairs/service by a third party not affiliated with Northwest Manufacturing, Inc. will not be covered under this warranty. All repairs must be performed by a Certified Contractor.

II. The workmanship, repairs or replacement of parts of the Certified Contractor will not be covered under this warranty.

III. Any costs for labor for the examination, removal or reinstallation of allegedly defective parts, transportation of the parts to and from Northwest Manufacturing, Inc. facilities will not be covered and will be the responsibility of the Original Owner. This includes any other labor and costs for any material necessary for the said examination, removal or re-installation.

IV. The warranty will not cover damage to the System or any of its original parts, replacement parts or other accessories or standard equipment caused by excessive temperatures, vandalism, fuel or gas explosion, electrical, chemical or electrochemical reaction, electrical failures, insurrection, riots, war, acts of God, combustion air contaminated externally, air impurities, sulfur or sulfuric action or reaction, dust particles, corrosive vapors, oxygen corrosion, and situating the System in an unsuitable location or continuing use of the System after onset of a malfunction or discovery of a defect.

V. This Warranty only covers manufactures defects and will not cover damage caused by ash corrosion.

Warranty

WARRANTY TERMS
The Warranty shall also be subject to the following terms and conditions:

I. The System must have been installed by a Certified Contractor.

II. The System must have been properly maintained, cleaned and serviced during the Warranty Periods by a certified boiler operator trained to operate a WoodMaster Commercial Series boiler.

III. This Warranty is non transferable and only covers the Original Owner, at the original site of installation.

IV. Northwest Manufacturing, Inc. shall have the time needed and unobstructed access to the System for the purpose of conducting tests of the System and for the making of repairs or installation of replacement parts.

V. Repairs, replacement or the repair of replacement parts shall be subject to the terms and conditions of this Warranty as if they had been installed at the time of original installation.

VI. This Warranty is limited to the provisions previously described and does not extend to any boiler, related parts or products that are (a) not sold in Canada or the United States; (b) not installed in Canada or the United States; or (c) not purchased from an Authorized Distributor.

VII. Northwest Manufacturing, Inc. shall not be responsible for any consequential damages, direct or indirect caused by the products described in this Warranty.

VIII. The Warranty for this System is also subject to the terms of the Warranty for the WoodMaster Commercial Series Boiler.

APPLICABLE LAW
All disputes, claims or demands arising from or relating to Warranty described shall be determined in accordance with the laws of Red Lake County, Minnesota, USA.

WARRANTY CLAIM/SERVICE
Notify the Certified Contractor who installed your System. The Contractor will then notify Northwest Manufacturing, Inc. who will make all warranty decisions. No warranty work can be carried out without approval from Northwest Manufacturing, Inc.. If the Certified Contractor fails to make a warranty claim, contact Northwest Manufacturing, Inc. directly.

Allegedly defective parts MUST be returned to Northwest Manufacturing, Inc. for the purpose of inspection to determine cause of failure.

Northwest Manufacturing, Inc. / 600 Polk Ave. SW / Red Lake Falls, MN 56750-5002
(800) 932-3629 • Fax: (218) 253-4409 / www.woodmaster.com

Northwest Manufacturing Inc.
600 Polk Ave. SW
Red Lake Falls, MN 56750

PLACE
POSTAGE
HERE

Northwest Manufacturing Inc.
600 Polk Ave. SW
Red Lake Falls, MN 56750

Warranty Registration Card

Please fill out the warranty registration card below and mail it back to us.
Failure to register may delay warranty claims.

WOODMASTER® Commercial Series

Northwest Manufacturing, Inc.

_____
Serial Number

_____
Model Name

Owners Name _____

Address _____

City _____ State _____ Zip _____

Fold Fold Fold Fold Fold Fold Fold Fold Fold

Daytime Phone _____ Home Phone _____

Email _____ Date of Installation _____

Contractors Name _____

Address _____

City _____ State _____ Zip _____

Phone _____

Fold Fold Fold Fold Fold Fold Fold Fold Fold

How did you learn about our product?

Radio ☐ Newspaper ☐ Internet ☐ TV ☐ Print ☐ Other _____

Would you like information on other products from Northwest Manufacturing, Inc.? ☐ Yes ☐ No

I have read the owners manual and understand the proper usage of my Ash Extraction System.

Customer's Signature _____ Printed Name _____

Contractor's Signature _____ Printed Name _____

Thank you for purchasing a WoodMaster Commercial Series Boiler Ash Extraction System.

Notes

WOOD MASTER®

Commercial Series

www.woodmaster.com / 800-932-3629 / Manual PN: 7994-400
Northwest Manufacturing, Inc / 600 Polk Ave SW / Red Lake Falls, MN 56750